SF-2400-4-PLG-TEE-CP-0.35GPM-MLM-FCT

(General Model Name: SF2400 CP FCT PED 4"TRIM PL HW W/BATTERY 0.35 GPM)

CODE NUMBER

3362178

DESCRIPTION

4" Trim Plate, Plug Adapter Power Supply, Back-Check Tee, Polished Chrome Finish, 0.35 gpm, Multi-Laminar Spray, Infrared Sensor, Sloan® Hardwired-Powered Deck-Mounted Mid Body.

DETAILS

- Flow Rate: 0.35 gpm (1.3 Lpm) (0.35GPM)
- Spray Type: Multi-Laminar (MLM)
- Spout Type: Pedestal
- Sensor Type: Infrared
- Mounting Type: Single Hole
- Trim Plate: 4" (102mm) (4)
- Power Supply: Plug Adapter (PLG)
- Temperature Mixer: Back-Check Tee (TEE)
- Finish: Polished Chrome (CP)
- Factory Default Timeout: 30 seconds
- Factory Default Gallons per Cycle: 0.175

FEATURES

Commercial Grade, ADA Compliant, Electronic, Sensor-Activated, Brass Pedestal Hand Washing Faucet with the following features:

- Adjustable Infrared Sensor Range
- 36” (914 mm) Long Sensor Cable
- 24” (610 mm) Long Flex Hose
- Filtered Solenoid Valve with serviceable Strainer Filter
- Includes Four (4) AA-size Batteries for Battery Backup
- Includes appropriate Mounting Hardware

ELECTRICAL SPECIFICATIONS

- Battery Life: 2 years 8,000 cycles/month
- Timeout Adjustment Settings: 30s

VIDEOS

- SF-2100/2150/SF-2200/2250/SF-2300/2350/SF-2400/2450 Parts Breakdown
- SF-2100/2150/SF-2200/2250/SF-2300/2350/SF-2400/2450 Module Replacement
- SF-2100/2150/SF-2200/2250/SF-2300/2350/SF-2400/2450 Battery Replacement- Sensor Range Adjustment

DOWNLOADS

- SF Series Installation Instructions
- SF Series (FR) Installation Instructions
- SF Series (SP) Installation Instructions
- SFP 35-A Installation Instructions
- Trim Plate Guide
- Sloan 2400/2450 Repair and Maintenance Guide

Variation not shown: 4" Trim Plate

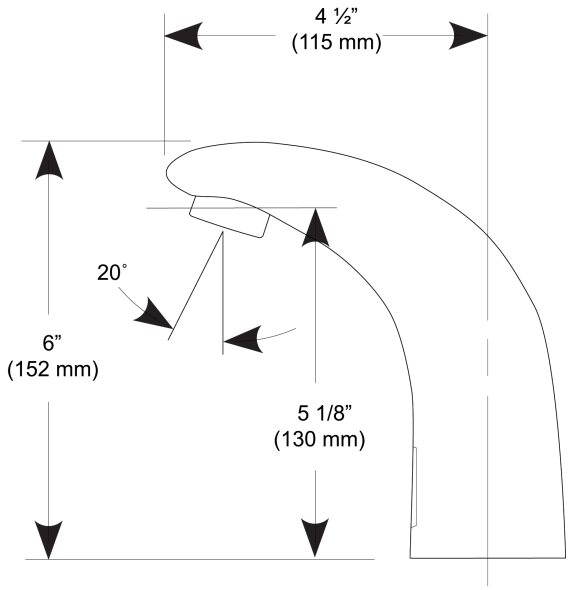

COMPLIANCES & CERTIFICATIONS

(ADA Compliant, ASME A112.18.1 Compliant, BREEAM Water Credit, CalGreen Compliant, CEC Compliant, cUPC Certified, UPC Certified, UPC Low Lead Compliant, cUPC Low Lead Compliant, EPD, Green Globes Water Credit, HPD, IAPMO, WaterSense Listed, NSF-61, NYC604.4, Proposition 65, Satisfies LEED Credits, TAS, WELL Building Standard)

Sloan 10500 Seymour Ave, Franklin Park, IL 60131
Phone: 800.982.5839 • Fax: 800.447.8329 • sloan.com

- Additional Downloads

NOTES

All information contained within this document subject to change without notice.

Looking for other variations of the SF-2400 product? View the general spec sheet with all options.

Find a matching soap dispenser for this faucet.
Find a compatible sink for this faucet.

WARRANTY

View Warranty Information

ROUGH-IN

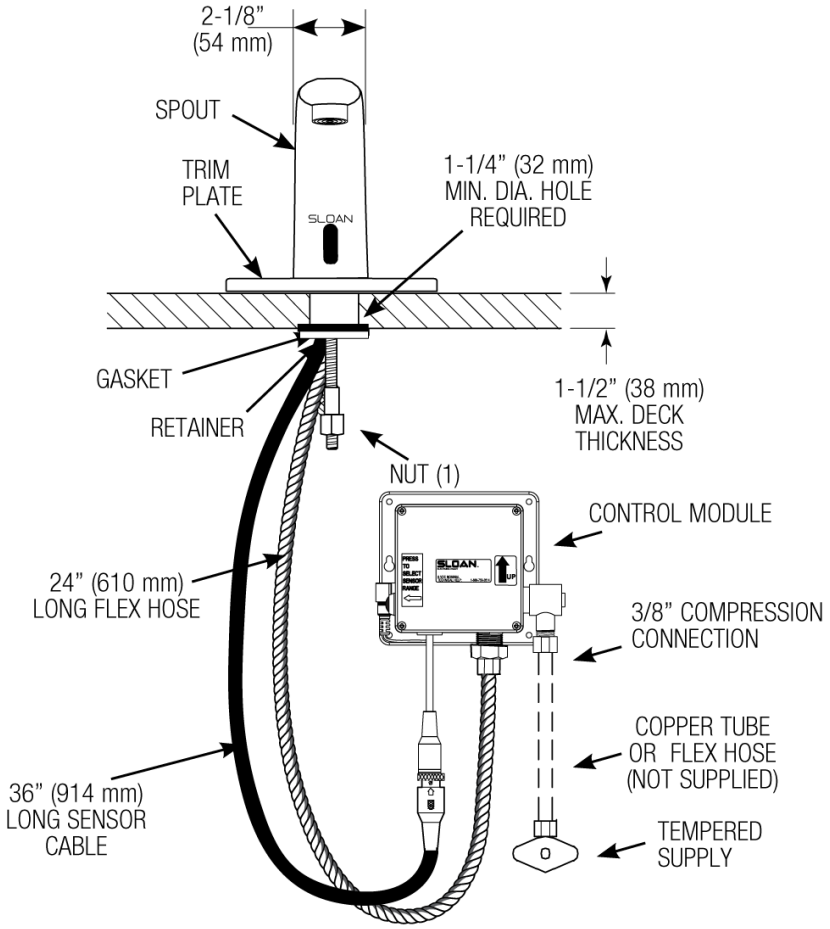
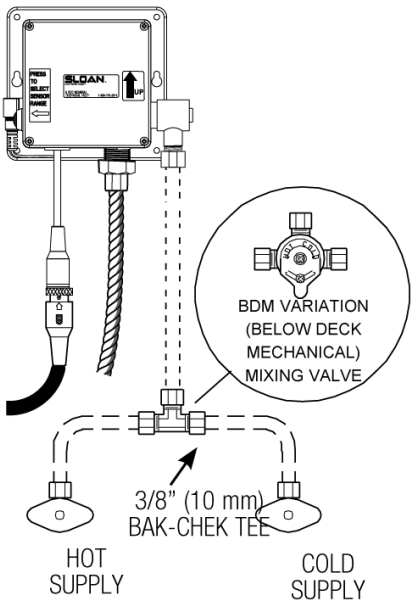
HOT AND COLD WATER SUPPLY APPLICATIONS
(SPECIFY IN MODEL VARIATION)